PORTABLE ICE MAKER

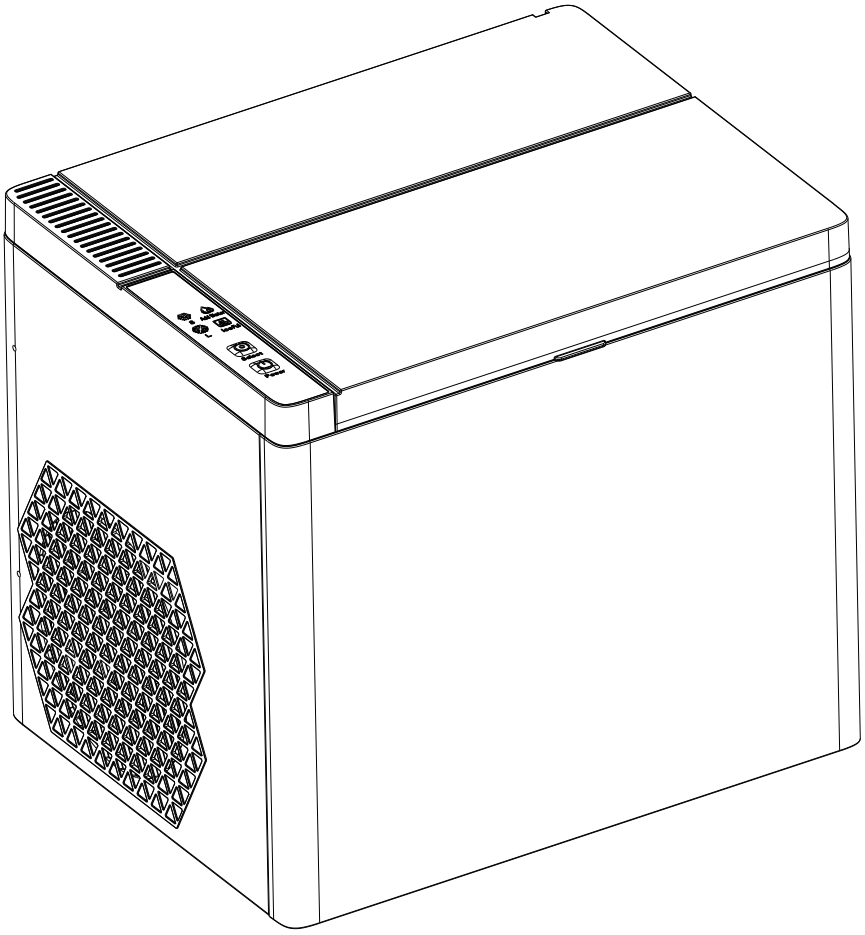

120V

ZB-12BZ

IMPORTANT SAFETY INSTRUCTIONS



CAUTION: TO REDUCE THE RISK OF ELECTRIC SHOCK, DO NOT REMOVE COVER (OR BACK). NO USER-SERVICEABLE PARTS INSIDE. REFER SERVICING TO QUALIFIED SERVICE PERSONNEL.



DANGEROUS VOLTAGE:
The lightning flash with arrowhead symbol within an equilateral triangle is intended to alert the user to the presence of uninsulated dangerous voltage within the product's enclosure that may be of sufficient magnitude to constitute a risk of electric shock to persons.



ATTENTION:
The exclamation point within an equilateral triangle is intended to alert the user to the presence of important operating and maintenance (servicing) instructions in the literature accompanying the appliance.

Please follow the precautions below for your new ice maker:

1. This appliance is not intended for use by persons (including children) with reduced physical, sensory or mental capabilities, or lack of experience and knowledge, unless they have been given supervision or instruction concerning use of the appliance by-a person responsible for their safety.
2. Children should be supervised to ensure that they do not play with the appliance.
3. If the supply cord is damaged, it must be replaced by the manufacturer or its service agent or a similarly qualified person in order to avoid a hazard.
4. This appliance should be set on a steady and flat surface.
5. This ice maker must be properly installed and located in accordance with the installation instructions before it is used.
6. Unplug the ice maker before cleaning and/or making repairs.
7. We strongly recommend that any servicing be performed by a qualified individual.
8. Do not leave ice maker in extreme cold or warm temperatures.
9. Do not place ice maker near heat sources or open flames.
10. Do not place ice maker where it will be exposed to direct sunlight.
11. Clean the ice maker with a soft and damp cloth. Remove stains with a mild soap. Do not clean the unit with industrial grade solvents or abrasive chemicals.
12. Do not place heavy items on top of the ice maker.
13. Never install the ice maker where there is a lot of moisture and water can splash.
14. Exercise caution and use reasonable supervision when appliance is used near children.
15. Do not tip over.
16. Do not operate with side or back panels removed.
17. If the ice maker is brought in from outside in wintertime, give it a few hours to warm up to room temperature before plugging it in.

SAVE THESE INSTRUCTIONS

FOR HOUSEHOLD USE ONLY

GROUNDING INSTRUCTIONS

This appliance must be grounded. In the event of an electrical short circuit, grounding reduces the risk of electric shock by providing an escape wire for the electric current. This appliance is equipped with a cord having a grounding wire with a grounding plug. The plug must be inserted into an outlet that is properly installed and grounded.

WARNING: Improper use of the grounding plug can result in a risk of electric shock. Consult a qualified electrician or service person if the grounding instructions are not completely understood or if doubt exists as to whether the appliance is properly grounded.
If it is necessary to use an extension cord, use only a three-wire extension cord that has a three-blade grounding plug and a three-slot receptacle that will accept the plug on the appliance. The marked rating of the extension cord should be equal to or greater than the electrical rating of the appliance

INSTALLATION

1. **Ventilation:** Do not block air vents. It is necessary to have adequate ventilation space around the ice maker in order to sustain proper performance, dissipation of heat, maintain efficiency and keep power consumption low. There should be a 5 inch minimum clearance maintained at the rear and sides of the unit and 8 inches on top of the unit.
2. **Cleaning:** It is highly recommended to thoroughly clean the ice maker before first use as shown on page 5.
3. **Wait One Hour:** When first time plugging in, wait one hour for refrigerant fluid to settle before turning on the unit.
4. **Power supply:**
   - Check your local power source. This ice maker requires a 120V , 60Hz power supply.
   - Use a receptacle that will accept the ground prong. The power cord of this appliance is equipped with 3-prong (grounding) plug which mates with a standard 3–prong (grounding) wall outlet to minimize the possibility of electric shock hazard from this appliance.

   A. Longer cord sets or extension cords are available and may be used if care is exercised in their use.
   B. If a long cord or extension cord is used, (1) the marked electrical rating of the cord set or extension cord should be at least as great as the electrical rating of the appliance. (2) The extension cord must be a grounding-type 3-wire cord, and (3) the longer cord should be arranged so that it will not drape over the countertop or tabletop where it can be pulled on by children or tripped over unintentionally.

LOCATION OF CONTROLS

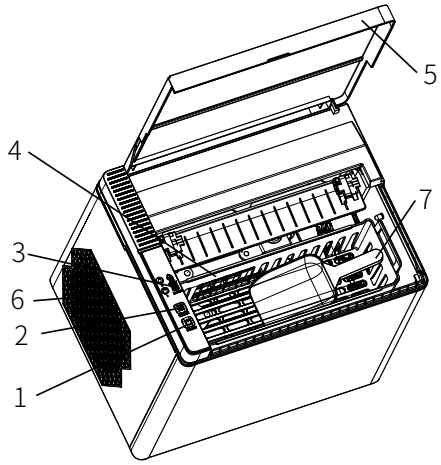

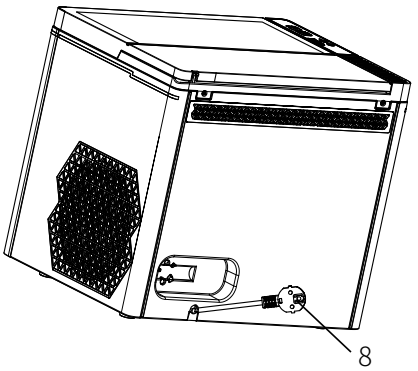

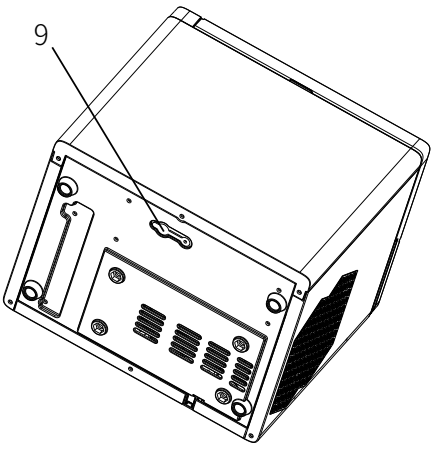

1. Cover Power Button
2. Ice Cube Select Button
3. Control Panel Indicators
   A. Small Ice Indicator
   B. Large Ice Indicator
   C. “Ice Full” Indicator
   D. “Add Water” Indicator
4. Ice Basket
5. Cover
6. Air Outlet
7. Ice Shovel
8. Detachable AC Cord
9. Water Drain Cap (Lower Left Rear of the Unit)

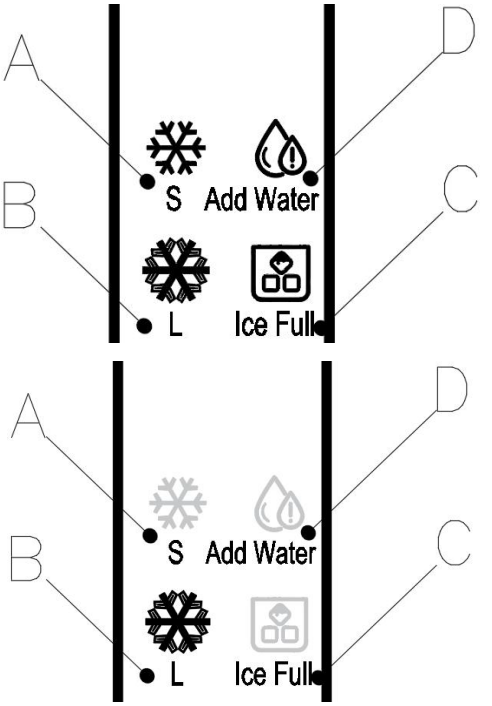

OPERATION

1

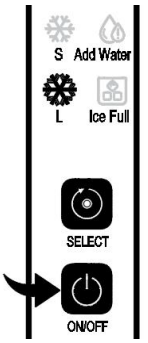

Lift open the cover, remove the ice basket and pour water into the tank NOT EXCEEDING THE WATER MAX MARK (Please refer to Fig. A). Reinsert the ice basket and close the cover. Plug in the unit and Large ice size indicator will blink. Press the Power button to begin the ice making process and the ice size indicator will illuminate.

2

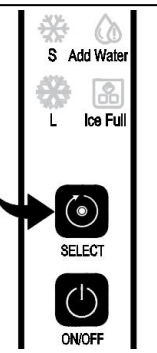

The default ice cube size is Large. Press the Select button repeatedly until the LED indicator for the desired ice size illuminates.
If the room temperature is lower than 60°F, it is recommended to select Small to avoid ice sticking together.

3

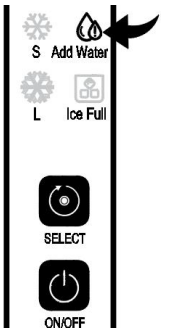

If there is water shortage while the ice maker is on, the unit will stop working automatically and the Add Water indicator will illuminate. Fill the water tank with water not exceeding the water max mark and ice maker will re-start automatically.

4

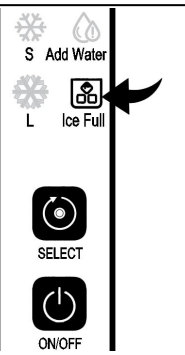

The ice maker automatically stops working when the ice basket is full in which case the Ice Full indicator will illuminate.

IMPORTANT:

1) The ice making cycle lasts 6 to 8 minutes, depending on the size of the ice cube selection, warmer water and/or room temperature will increase the ice making time. Use cool water to shorten the ice making time.

2) Only fresh, clean water should be used for making ice. Liquids such as fruit juice, milk and soda will damage the machine. For best results, the use of distilled water is recommended.

3) Change the water in the water tank every 24 hours to ensure a reasonable hygienic environment within your ice maker. If unit is not in use, drain all water in the tank.

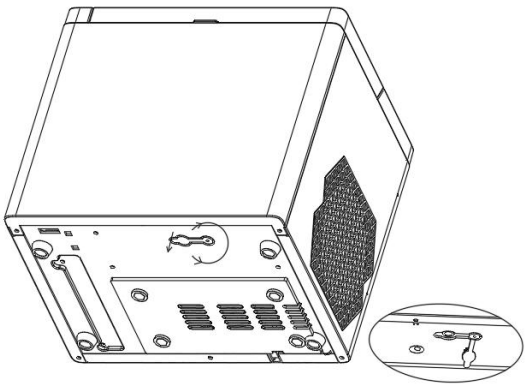

Fig. A

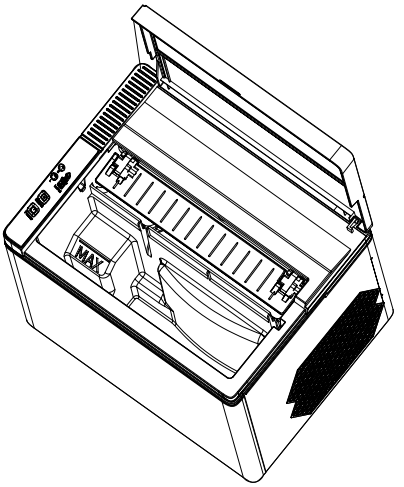

CLEANING AND MAINTAINING YOUR ICE MAKER

Before using your ice maker, you are strongly recommended to clean it thoroughly

1. Unplug the ice maker before cleaning.
2. Remove the ice basket.
3. Clean the interior and ice basket with mild and diluted detergent and warm water.
4. Remove drain cap to drain water. Reinsert after drainage.
5. The outside of the ice maker should be cleaned regularly with a mild detergent solution and warm water.
6. Dry the interior, exterior and ice basket with a soft cloth.
7. When the machine is not in use, remove the water drain cap to completely drain the water tank.

IMPORTANT:

1. Mold formation can occur if moisture gets trapped inside the unit. Drain the water after use and ensure the inside of the unit is completely dry before storing.
2. ** Be sure to vacuum the back and the sides of the unit thoroughly by the vent suction to remove excess lint and dust every month. Dust and lint will prohibit the unit's motor from working properly.** DO NOT OPEN THE UNIT TO VACUUM.

SPECIFICATIONS

Model	**ZB-12BZ**
Cl mate type	**N/SN/ST**
Ice making capacity	**12Kg/24h**
Ice storage	**600g**
Water tank capacity	**1.5L**
Rated voltage/Frequency	**120V, 60Hz**
Rated current	**1.5A**
Input power	**170W**
Shock protection grade	**I**
Insulation layer	**EPS**
measurement	**288*225*262（mm）**
Net weight	**5.6Kg**

Specification and design subject to change without notice

TROUBLESHOOTING GUIDE

Problem	Possible Causes	Solution
The unit does not operate.	Power is not being supplied.	Check your local power source. This ice maker requires a 120V, 60Hz power supply.
	A household fuse or circuit breaker has been tripped.	
	The detachable power cord is not connected properly.	Make sure the power cord is connected firmly to the unit and plugged correctly into the power outlet.
“Add Water” indicator illuminates.	Water shortage.	Add water not exceeding the water max mark and the ice maker will re-start automatically.
“Ice Full” indicator illuminates.	The ice basket is full.	Remove ice from ice basket.
Ice cubes stick together.	Ice making cycle is too long.	Press Power button to turn off the unit, then press Power button again to turn on the unit. Select the small ice size.
	Water temperature in water tank is too low.	Replace water in the water tank. Water temperature between 45°F and 90°F is recommended.
The ice making cycle seems normal but no ice is made.	Ambient temperature or water temperature in water tank is too high.	Please operate the ice maker in room temperature below 90°F. Water temperature between 45°F and 90°F is recommended.
	There is refrigerant leakage.	Call an authorized technician to repair.
	Pipe in the cooling system is blocked.	Call an authorized technician to repair.
“Add Water” and “Ice Full” indicator are both blinking.	Ice is stuck in the ice making box.	Press Power button to turn off the unit. Remove the ice cubes in the ice making box. Press Power button again to re-start.
	Mechanical failure	If both indicators remain blinking after removing ice cubes and re-start, unplug the ice maker for 2 minutes and plug in the unit again.
	Components may be damaged	Call an authorized technician to repair.